Bergen
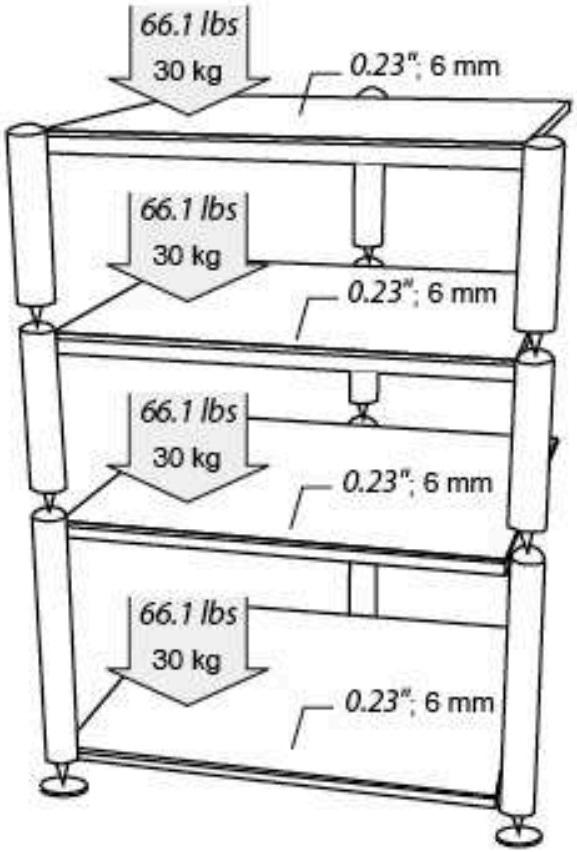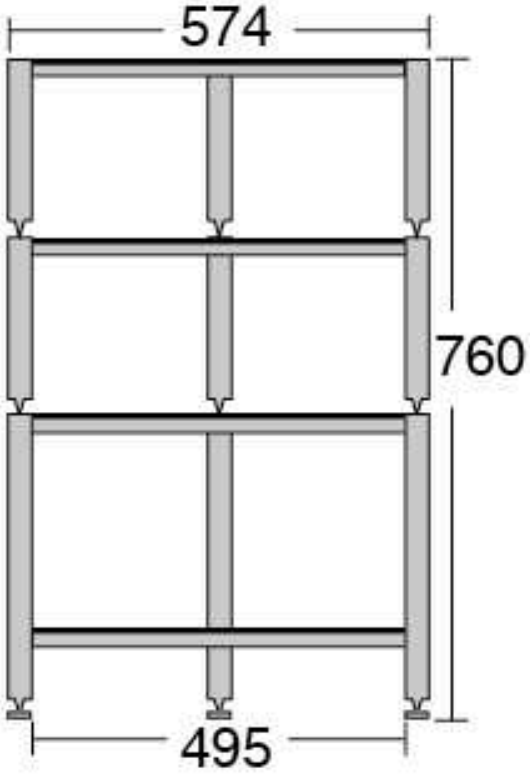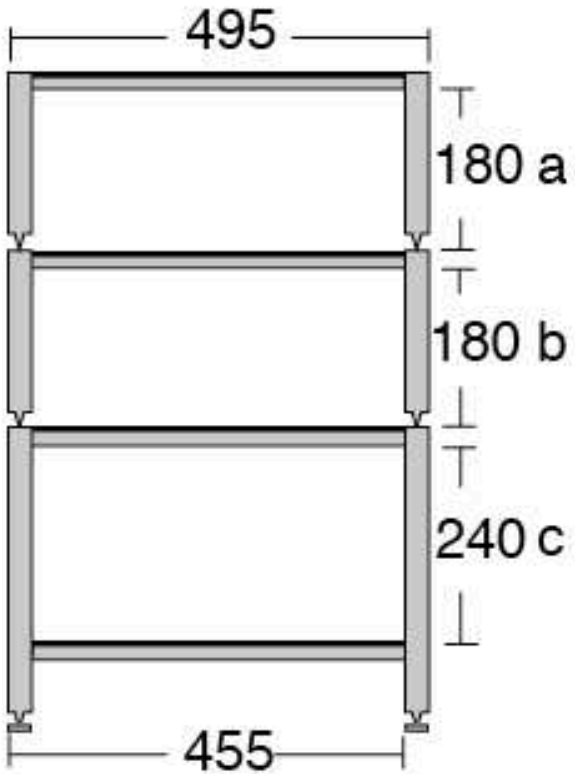
NorStone design